DIN Rail Power Supply

0165N-24V240W1AC / 24V 240W 1 Phase (NEC Class 2)

Highlights & Features

- Universal AC input voltage range
- Built-in constant current circuit for reactive loads
- Up to 90.0% efficiency
- Full power from -20°C to +50°C operation at 230Vac @5,000 meters or 16,400 feet altitude
- Built-in DC OK relay contact option available
- Compliance to SEMI F47 @ 200Vac
- Conformal coating on PCBAs to protect against common dust and chemical pollutants

Saftey Standards

CB Certified for worldwide use

Model Number： 0165N-24V240W1AC
Unit Weight： 0.80 kg (1.76 lb)
Dimensions(L x W x D)： 123.6 x 60 x 117.6 mm
(4.86 x 2.36 x 4.63 inch)

General Description

This Dinkle DIN rail power supply is designed for cost sensitive users who need to fulfill essential features needed for many general industrial applications, without compromising on quality and reliability. The convection-cooled series will operate between -20°C to 70°C, with full rated power available from -10°C to +50°C at 230Vac. The overcurrent protection is designed to operate in constant current mode, which makes the series suitable for inductive and capacitive load applications. The product is certificed according to safety standards IEC/EN/UL 60950-1 for Information Technology Equipment (ITE) and UL508 for Industrial Control Equipment (ICE). Electromagnetic radiated and conducted emissions are compliant to EN 55032, Class B; and, the product is fully compliant for environmental protection requirement per RoHS Directive (EU)2015/863.

Model Information

0165N DIN Rail Power Supply

Model Number	Iinput Voltage Range	Rated Output Voltage	Rated Outpt Current
0165N-24V240W1AC	85-264Vac (120-375Vdc)	24Vdc	10.0A

Model Numbering

0165N	-	24V	240W	1	AC
Power supply		Output Voltage	Output Power	Single Phase	Input Current

TEL：+886-2-8069-9000 / E-mail：service@dinkle.com
© DINKLE ENTERPRISE CO., LTD. ALL RIGHT RESERVED

Specifications

Input Ratings / Characteristics

Nominal Input Voltage		100-240Vac
Input Voltage Range		85-264Vac
Nominal Input Frequency		50-60Hz
Input Frequency range		47-63Hz
DC Input Voltage Range*		120-375Vdc
Input Current		2.8A typ. @ 115Vac, 1.4A typ. @ 230Vac
Efficiency at 100% Load		88.0% typ. @ 115Vac, 90.0% typ. @ 230Vac
Max Power Dissipation	0% load	4.62W @ 115Vac & 2.14W @ 230Vac
	100% load	31.53W @ 115Vac & 25.44W @ 230Vac
Max Inrush Current (Cold Start)		20A typ. @ 115Vac, 40A typ. @ 230Vac
Power Factor at 100% Load		> 0.95 @ 115Vac & 230Vac
Leakage Current		< 1mA @ 264Vac

*Fulfills test conditioins for DC input. Safety approval for DC input can be obtained upon request.

All parameters are specified at 25°C ambient and AC input unless otherwise indicated.

Output Ratings / Characteristics*

Nominal Output Voltage	24Vdc
Factory Set Point Tolerance	24Vdc ± 2%
Output Voltage Adjustment Range	22-28Vdc
Output Current	10.0A (240W max.)
Output Power	240W
Line Regulation	< 0.5% (@85-264Vac, 100% Load)
Load Regulation	< 1.0% (0-100% Load) @ > -10°C to +70°C < 1.5% (0-100% Load) @ ≦ -10°C to -20°C
PARD (20MHz)**	< 120mVpp @ 0C to +70°C < 240mVpp @ < 0°C to -10°C < 360mVpp @ <-10°C to -20°C
Rise Time	100ms typ. @ nominal input (100% Load)
Start-up Time	1,000ms typ. @ 115Vac & 230Vac (100% Load)
Hold-up Time	10ms typ. @ 115Vac & 16ms typ. @ 230Vac (100% Load)
Dynamic Response (Overshoot & Undershoot O/P Voltage)	± 10% (2400mVpp) @ 85-264Vac input, 0-100% load (Slew Rate: 0.1A/μS)

TEL : +886-2-8069-9000 / E-mail : service@dinkle.com
© DINKLE ENTERPRISE CO., LTD. ALL RIGHT RESERVED

Output Ratings / Characteristics*

Start-up with Capacitive Loads		8,000μF Max
Functionan	DC OK Relay Contact	30V / 1A The relay contact are nomally "ON" (closed) when the output (Vout) is greater than 90% of its rated value.

** For power de-rating from 40°C to 70°C @ 115Vac and 50°C to 70°C @ 230Vac and Vin < 100Vac, see power de-rating on next page "Environment" section.
***PARD is measured with an AC coupling mode, 5cm wires, and in parallel with 0.1μF ceramic capacitor & 47μF electrolytic capacitor.

Mechanical

Case Cover		SGCC / Aluminium
Dimensions (L x W x D)		123.6 x 60 x 117.6 mm (4.86 x 2.36 x 4.63 inch)
Unit Weight		0.80 kg (1.7 lb)
Indicator		Green LED (DC OK)
Cooling System		Convection
Terminal	Input / Output	3 Pins (Rated 600V / 35A) / 4 Pins (Rated 300V / 28A)
Wire	Input / Output	AWG 16-12 / AWG 16-12
Mounting Rail		Standard TS35 DIN Rail in accordance with EN60715
Noise (1 Meter from Power Supply)		Sound Pressure Level (SPL) < 25dBA

Environment

Surrounding Air Temperature	Operating	-20°C to +70°C
	Storage	-40°C to +85°C
Power De-rating	Temperature	> 40°C de-rate power by 1.67% / °C @115Vac > 50°C de-rate power by 2.5% / °C @230Vac
	Input Voltage	< 100Vac de-rate power by 1% / Vac
Operating Humidity		5 to 95 % RH (Non-Condensing)
Operating Altitude		0 to 5,000 Meters (16,400 ft.)
Shock Test	Non-Operating	IEC60068-2-27, 27, Half Sine Wave: 50G for a duration of 11ms; 3 times per direction, 9 times in total
	Operation	IEC60068-2-27, 27, Half Sine Wave: 10G for a duration of 11ms; 1 time for X axis

© DINKLE ENTERPRISE CO., LTD. ALL RIGHT RESERVED

Environment

Vibration	Non-Operating	IEC 60068-2-6, Random: 5-500Hz; 2.09Grms, 20min per axis for all X, Y, Z directions
	Operation	IEC 60068-2-6, Sine Wave: 10Hz to 500Hz; 19.6m/S2 (2G peak); displacement of 0.35mm; 10min per cycle, 60 min for X direction
Pollution Degree		2

Protections

Overvoltage	28.5V-35.2V, SELV Output, Latch Mode
Overload / Overcurrent	105-150% of rated load current, constantContinuous current
Over Temperature	Latch Mode
Short Circuit	Hiccup Mode, Non-Latching (Auto-recovery when the fault is removed)
Internal Fuse at L Pin	T6.3A H / 250V
Degree of Protection	IP20
Protection Against Shock	Class I with PE* connection

* PE: Primary Earth

All parameters are specified at 25°C ambient and AC input unless otherwise indicated.

Reliability Data

MTBF	Telcordia SR-332	> 700,000 hrs. I/P: 100Vac, O/P: 100% load, Ta: 25°C
Expected Cap Life Time		10 years (115Vac & 230Vac, 50% load @ 40°C)

Saftey Standards / Directives

Safety Entry Low Voltage		SELV (EN 60950-1)
Electrical Safety	CB scheme	IEC60950-1
Industrial Control Equipment	UL/cUL Listed	UL508 and CSA C22.2 No. 107.1-01 (File No. E…)
CE		In Conformance with EMC Directive 2014/30/EU and Low Voltage Directive 2014/35/EU
Material and Parts		RoHS Directive (EU) 2015/863 Compliant (EN 50581)
Galvanic Isolation	Input to Output	3.0KVac
	Input to Ground	2.0KVac
	Output to Ground	0.5KVac

© DINKLE ENTERPRISE CO., LTD. ALL RIGHT RESERVED

EMC

Emissions (CE & RE)		Generic Standards: EN 61000-6-3, EN 61000-6-4 CISPR 32, EN 55032, EN 55011, FCC Title 47: Class B; GB9254.1
Component Power Supply for General Use		EN61204-3
ImmunityElectrostatic Discharge		Generic Standards: EN61000-6-1, EN61000-6-2, EN55024
Electrostatic Discharge	IEC 61000-4-2	Level 4 Criteria A[1]) Air Discharge: 15KV Contact Discharge: 8KV
Radiated Field	IEC 61000-4-3	Level 3 Criteria A[1]) 80MHz-1GHz, 10V/M with 1kHz tone / 80% modulation 1.4GHz-2GHz, 3V/M with 1kHz tone / 80% modulation 2GHz-2.7GHz, 1V/M with 1kHz tone / 80% modulation
Electrical Fast Transient / Burst	IEC 61000-4-4	Level 3 Criteria A[1]) 2kV
Surge	IEC 61000-4-5	Level 4 Criteria A[1]) Common Mode3): 4kV Differential Mode4): 2kV
Conducted	IEC 61000-4-6	Level 3 Chriteria A[1]) 150kHz-80MHz, 10Vrms
Power Frequency Magnetic Fields	IEC 61000-4-8	Level 4 Criteria A[1]) 30A/m
Voltage Dips and Interruptions	IEC 61000-4-11	0% of 100Vac, 20ms Criteria A[1]) 40% of 100Vac, 200ms Criteria A[1]) 70% of 100Vac, 500ms Criteria B[2]) 0% of 100Vac, 5,000ms Criteria B[2]) 0% of 240Vac, 20ms Criteria A[1]) 40% of 240Vac, 200ms Criteria A[1]) 70% of 240Vac, 500ms Criteria A[1]) 0% of 240Vac, 5,000ms Criteria B[2])
Low Energy Pulse Test (Ring Wave)	IEC 61000-4-12	Level 3 Criteria A[1]) Comment Mode3): 2KV Differential Mode4): 1KV
Harmonic Current Emission		IEC/EN 61000-3-2, Class A; GB17625.1
Voltage Fluctuation and Flicker		IEC/EN 61000-3-3

© DINKLE ENTERPRISE CO., LTD. ALL RIGHT RESERVED

EMC

Voltage Sag Immunity SEMI F47-0706	80% of 200Vac	160Vac, 1000ms	Criteria A[1])
	70% of 200Vac	140Vac, 500ms	Criteria A[1])
	50% of 200Vac	100Vac, 200ms	Criteria A[1])

1) Criteria A: Normal Performance within the specification limits
2) Criteria B: Temporary degradation or loss of function which is self-recoverable
3) Asymmetrical: Common mode (Line to earth)
4) Symmetrical: Differential mode (Line to line)

All parameters are specified at 25°C ambient and AC input unless otherwise indicated.

Dimensions

L X W X D：123.6 X 60 X 117.6mm [4.87 X 2.63 X 4.63 inch]
DRL-24V240W1AA

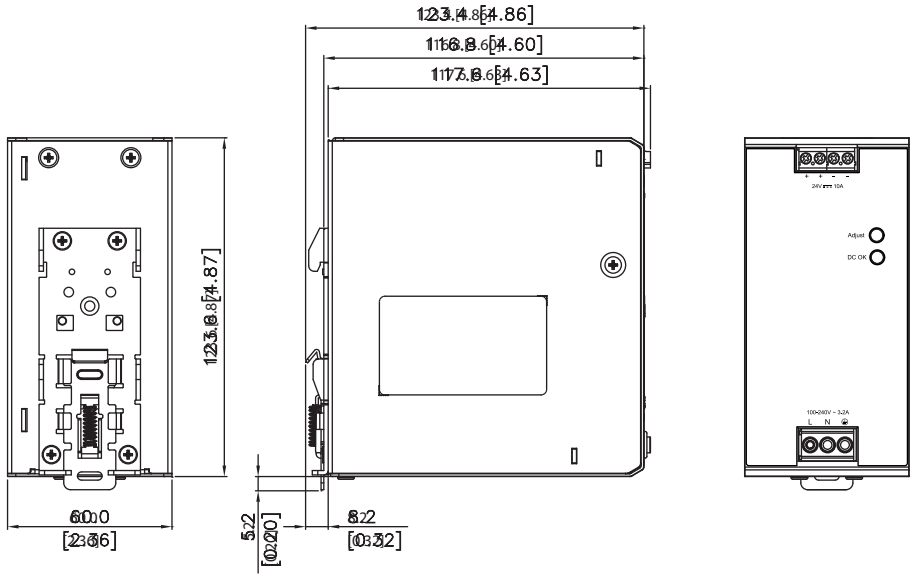

© DINKLE ENTERPRISE CO., LTD. ALL RIGHT RESERVED

Block Diagram

DRL-24V240W1AA

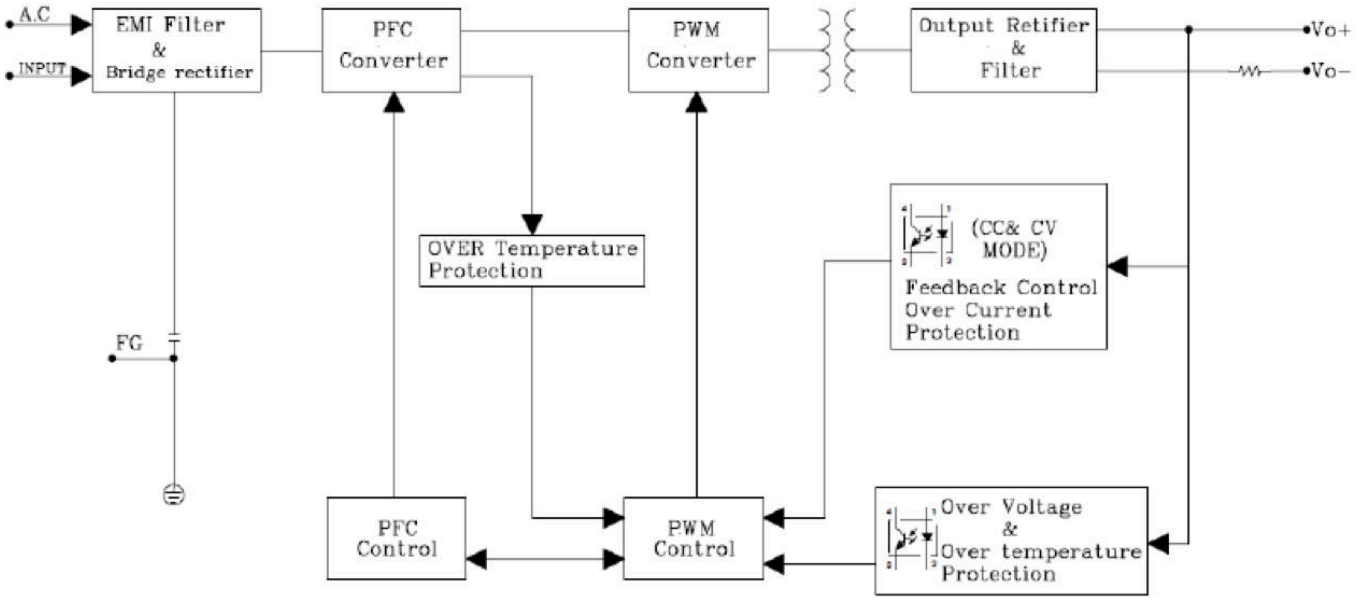

Device Description

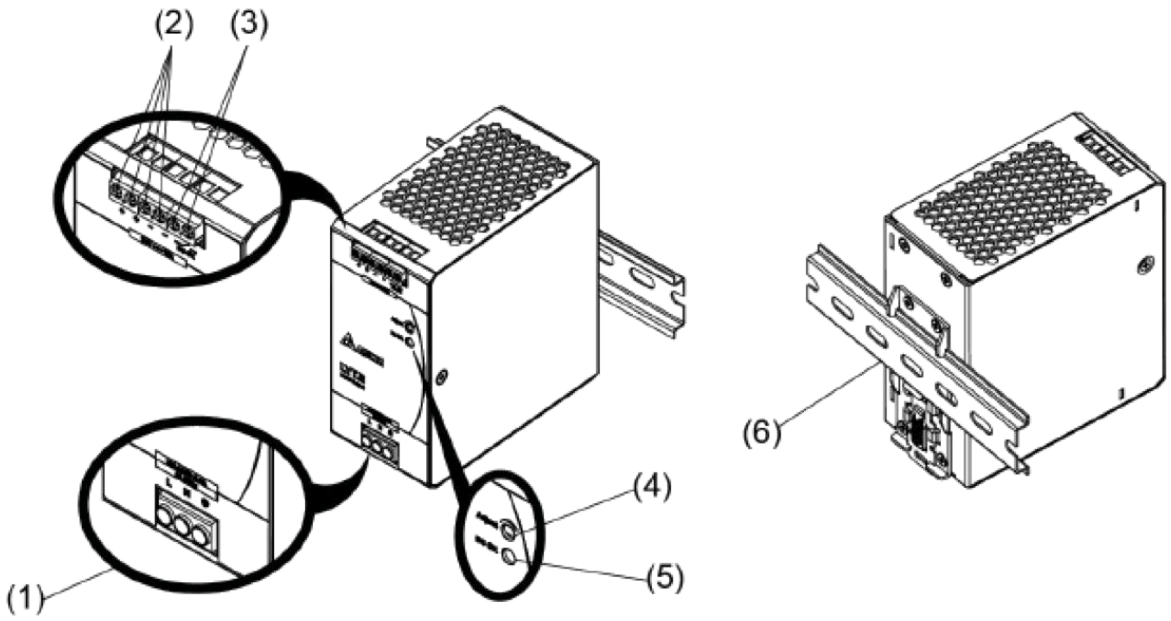

1) Input terminal block connector
2) Output terminal block connector
3) DC OK relay contact (for DRL-24V-240W1AS only)
4) DC voltage adjustment potentiometer
5) DC OK LED (Green)
6) Universal mounting rail system

© DINKLE ENTERPRISE CO., LTD. ALL RIGHT RESERVED

Assembly & Installation

The power supply unit (PSU) can be mounted on 35mm DIN rails in accordance with EN60715. The device should be installed with input terminal block at the bottom.

Each device is delivered ready to install.

Mounting

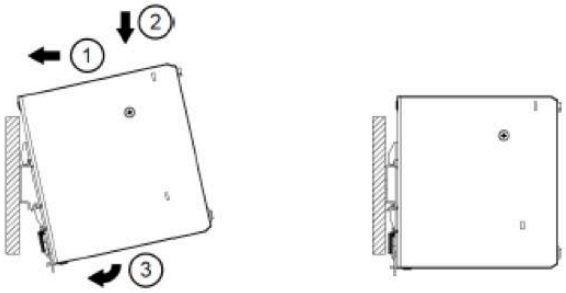

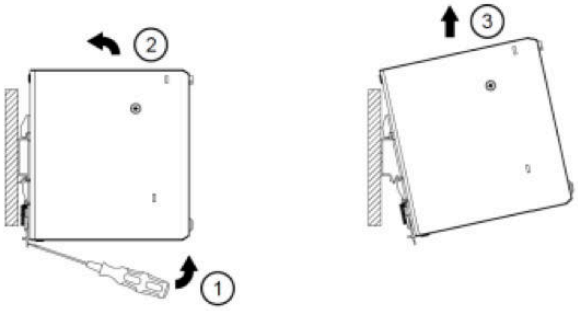

Fig. 2.1 Mounting

Snap on the DIN rail as shown in Fig. 2.1 :
1. Tilt the unit upwards and insert in onto the DIN rail.
2. Push downwards until stopped.
3. Press against the bottom front side for locking.
4. Shake the until slightly to endure that it is secured.

Fig. 2.1 Dismounting

To uninstall, pull or slide down the latch with screw driver as shown in fig. 2.2. Then slide the power supply unit (PSU) in the opposite direction, release the latch and pull out the power supply unit (PSU)from the rail.

In accordance to EN 60950 / UL 60950, flexible cables reqire ferrules.
Use appropriate copper cables designed to sustain operating tempature of at least 60°C / 75°C or more to fulfill UL requirements.

© DINKLE ENTERPRISE CO., LTD. ALL RIGHT RESERVED