AKK2.5-D01

DIN Rail Terminal Blocks > Spring Clamp Connection

Date:2026-06-18Version:1.1

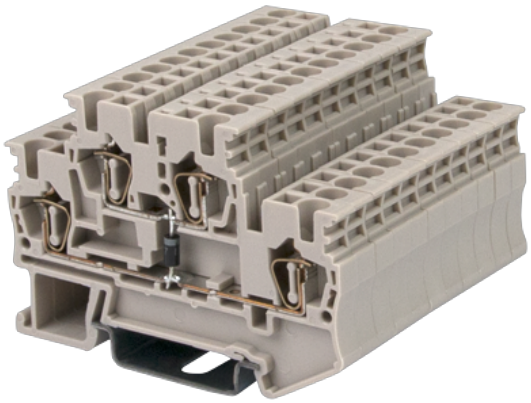

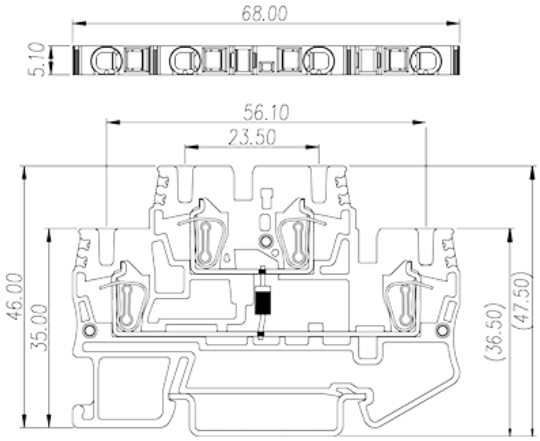

The web catalog is for reference only. Dinkle remains the right of product modification and engineering change of the design. The final product is made according to engineering drawing.

Product Description

250V, 0.5A, Beige (default)

General information

Short description	DIN Rail terminal blocks, Diode terminal blocks
Category	Diode terminal blocks
Color	Beige (default)
Connection method	Spring Clamp Connection
Type of locking	Rail Mounting
Length (mm)	68
Width (mm)	5.1
Height (mm)	46
Level	Double level
Connection points	4

Material information

Insulation material	PA
Insulation material group	I
Flame retardant rating , compliant with UL94	V0

© DINKLE ENTERPRISE CO ,LTD. ALL RIGHT RESERVED

Insulation resistance	≧500MΩ at DC 500V

Connection data-IEC

Rated voltage (V)	250
Rated current (A)	0.5
Rated voltage (III/3)(V)	250
Rated impulse voltage (II/2)(KV)	8
Rated impulse voltage (III/2)(KV)	8
Rated impulse voltage (III/3)(KV)	8
Conductor cross section solid. min (mm^2)	0.2
Conductor cross section solid.max (mm^2)	4
Conductor cross section stranded. min (mm^2)	0.2
Conductor cross section stranded. max (mm^2)	2.5
Conductor cross section flexible, with min ferrule without plastic sleeve (mm^2)	0.25
Conductor cross section flexible, with max ferrule without plastic sleeve (mm^2)	2.5
Conductor cross section flexible, with min ferrule with plastic sleeve (mm^2)	0.25
Conductor cross section flexible, with max ferrule with plastic sleeve (mm^2)	2.5
2 conductors with same cross section flexible, min twin ferrules with plastic sleeve (mm^2)	0.5
2 conductors with same cross section flexible, max twin ferrules with plastic sleeve (mm^2)	0.5
Slotted screwdriver size (Blade thickness x Width)(mm)	0.6x3.5
Stripping Length (mm)	10
Mounting rail	TS-35
End cover plate required	YES
Grounding connections	NO

Connection data-UL

Rated voltage (UL/CUL Group B)(V)	250
Rated current (UL/CUL Group B)(A)	0.5
Rated voltage (UL/CUL Group C)(V)	250
Rated current (UL/CUL Group C)(A)	0.5
Min. solid wire connection (AWG) acc. to UL/CUL	30
Max. solid wire connection AWG acc. to UL/CUL	12

© DINKLE ENTERPRISE CO ,LTD. ALL RIGHT RESERVED

Min. stranded wire connection AWG acc. to UL/CUL	30
Max. stranded wire connection AWG acc. to UL/CUL	12

Environment & Safety

Back of the hand protection (YES or NO)	YES
Finger protection (YES or NO)	YES
Operating temperature. max (°C)	120
Operating temperature. min (°C)	-40

Drawings

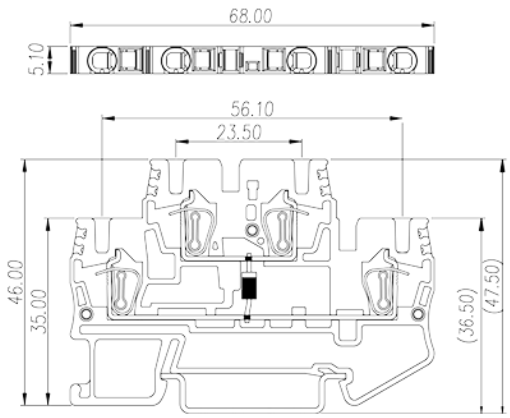

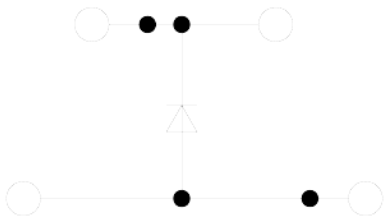

Approvals

Accessories

DSD01-2.5XXN

Plug-in bridge

For DP2.5N Series, DPP2.5N Series, DP2.5N-3L Series, DP2.5SG Series, DPES2.5, DPES2.5-PE, DKD10-P001, DPHD10-P001, DPD16-P001, DPD10-P001, DPH2.5 Series, DPPES2.5, DPPES2.5-PE, AK2.5 Series, AKK2.5, AKK2.5-D01, AKK2.5-D02, AKK2.5-D03, AKK2.5-D04, AKK2.5-PV Red color. Using UL94-V0 class of insulation material.

© DINKLE ENTERPRISE CO ,LTD. ALL RIGHT RESERVED

TM42LW

Marking Label

For BEST APPLICATION： DP2.5N Series, DP2.5N-3L-SPE, DPH2.5 Series, AK2.5 Series, DKES1.5N2, DKES1.5N3, DPP2.5N Series, DP2.5N-3L, DP2.5N-3L-PV, DP2.5N-3L-L3PE, DP2.5N-3L-PE, DPH1.5SGU, DK2.5S, DK1.5SG Series, PM2.5N-XXP, PM2.5WN-XXP, PMM2.5WN-XXP, AKK2.5, AKK2.5-PV, AKK2.5-PE, AKK2.5-D Series, DK2.5L-3L, DK2.5P AVAILABLE APPLICATION： DPES2.5, DPES2.5-PE, DP2.5PG, DP2.5SG Series, DPPES2.5, DPPES2.5-PE White color. Using UL94-V0 class of insulation material.

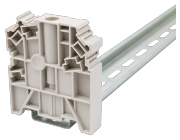

SS6N

End Bracket

For TS-35, TS-35/15 rails. Beige color. Using UL94-V0 class of insulation material.

SS11

End Bracket

For TS-35, TS-35/15 rails. Beige color. Using UL94-V0 class of insulation material.

TS-35

DIN-Rail

For DP / DK..N / DK.. / AK / DKB / DKU.. /DKM.. series. Material is iron. Length of 1000mm / 2000mm.

TS-35/15

DIN-Rail

For DK / DK-PE series. Material is iron. Length of 1000mm / 2000mm.

TS-35C

DIN rail end cap

For TS-35 rail. Black color. Using UL94-V2 class of insulation material.

TM-R100

Continuous Flat Marking Labels

© DINKLE ENTERPRISE CO ,LTD. ALL RIGHT RESERVED

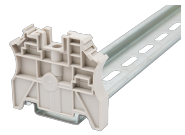

SS7N
End Bracket
For TS-35, TS-35/15 rails. Beige color. Using UL94-V0 class of insulation material.

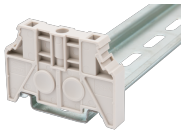

SS4N
End Bracket
For TS-35, TS-35/15 rails. Beige color. Using UL94-V0 class of insulation material.

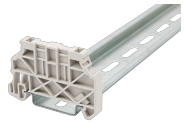

SS13
End Bracket
For TS-35, TS-35/15 rails. Beige color. Using UL94-V0 class of insulation material.

MKP-502
Label
For DPP Series, AKK Series. Using UL94-V0 class of insulation material.

AKK2.5C
End Cover
For AKK1.5 / AKK2.5 Beige color. Using UL94-V0 class of insulation material.

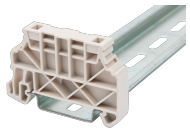

SS5N
End Bracket
For TS-35, TS-35/15 rails. Beige color. Using UL94-V0 class of insulation material.

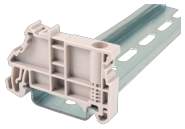

SS2N
End Bracket
For TS-35, TS-35/15 rails. Beige color. Using UL94-V0 class of insulation material.

© DINKLE ENTERPRISE CO ,LTD. ALL RIGHT RESERVED