DK2.5N-3L-PE

DIN Rail Terminal Blocks > Screw Connection

Date:2026-06-18

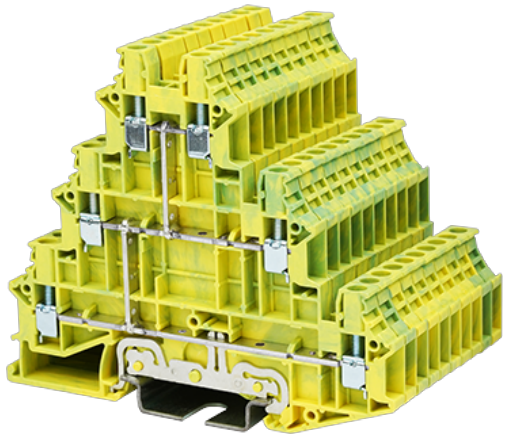

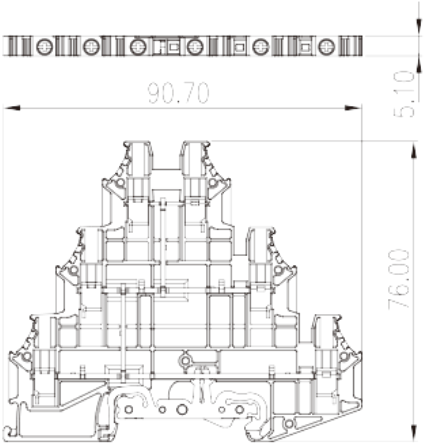

The web catalog is for reference only. Dinkle remains the right of product modification and engineering change of the design. The final product is made according to engineering drawing.

Product Description

600V, Yellow-Green (default)

General information

Short description	Grounding Terminal Block, Screw Connection
Category	Grounding Terminal Block
Color	Yellow-Green (default)
Connection method	Screw Connection
Type of locking	Rail Mounting
Length (mm)	90.7
Width (mm)	5.1
Height (mm)	76/77.3 (TS-35N) /84.8 (TS-35/15N)
Level	Three level
Connection points	6

Material information

Insulation material	PA
Insulation material group	I
Flame retardant rating , compliant with UL94	V0
Insulation resistance	≧500MΩ at DC 500V

© DINKLE ENTERPRISE CO ,LTD. ALL RIGHT RESERVED

Connection data-IEC

Rated voltage (V)	1000
Rated voltage (III/3)(V)	1000
Rated impulse voltage (III/3)(KV)	8
Conductor cross section solid. min (mm²)	0.34
Conductor cross section solid.max (mm²)	4
Conductor cross section stranded. min (mm²)	0.34
Conductor cross section stranded. max (mm²)	2.5
Conductor cross section flexible, with min ferrule without plastic sleeve (mm²)	0.5
Conductor cross section flexible, with max ferrule without plastic sleeve (mm²)	2.5
Conductor cross section flexible, with min ferrule with plastic sleeve (mm²)	0.5
Conductor cross section flexible, with max ferrule with plastic sleeve (mm²)	2.5
2 conductors with same cross section, solid, min (mm²)	0.34
2 conductors with same cross section, solid, max (mm²)	1.5
2 conductors with same cross section, stranded, min (mm²)	0.5
2 conductors with same cross section, stranded, max (mm²)	1.5
2 conductors with same cross section flexible, with min ferrule without plastic sleeve (mm²)	0.5
2 conductors with same cross section flexible, with max ferrule without plastic sleeve (mm²)	1.5
2 conductors with same cross section flexible, min twin ferrules with plastic sleeve (mm²)	0.5
2 conductors with same cross section flexible, max twin ferrules with plastic sleeve (mm²)	1.5
Screw thread	M2.5
Slotted screwdriver size (Blade thickness x Width)(mm)	0.6x3.5
Rated torque (N.m)	0.4
Recommend tightening torque. min (N.m)	0.4
Recommend tightening torque. max (N.m)	0.5
Stripping Length (mm)	10
Mounting rail	TS-35N、TS-35/15N
End cover plate required	YES
Grounding connections	YES

© DINKLE ENTERPRISE CO ,LTD. ALL RIGHT RESERVED

Connection data-UL

Rated voltage (UL/CUL Group B)(V)	600
Rated voltage (UL/CUL Group C)(V)	600
Rated voltage (UL/CUL Group D)(V)	600
Min. solid wire connection (AWG) acc. to UL/CUL	22
Max. solid wire connection AWG acc. to UL/CUL	12
Min. stranded wire connection AWG acc. to UL/CUL	22
Max. stranded wire connection AWG acc. to UL/CUL	12

Environment & Safety

Back of the hand protection (YES or NO)	YES
Finger protection (YES or NO)	YES
Operating temperature. max (°C)	120
Operating temperature. min (°C)	-40

UL Recognized

Wire Range (Group B)(AWG)	22~12
Rated voltage (Group B)(V)	600
Wire Range (Group C)(AWG)	22~12
Rated voltage (Group C)(V)	600
Wire Range (Group D)(AWG)	22~12
Rated voltage (Group D)(V)	600

CUL Recognized

Wire Range (Group B)(AWG)	22~12
Rated voltage (Group B)(V)	600
Wire Range (Group C)(AWG)	22~12
Rated voltage (Group C)(V)	600
Wire Ranget (Group D)(AWG)	22~12
Rated voltage (Group D)(V)	600

Drawings

© DINKLE ENTERPRISE CO ,LTD. ALL RIGHT RESERVED

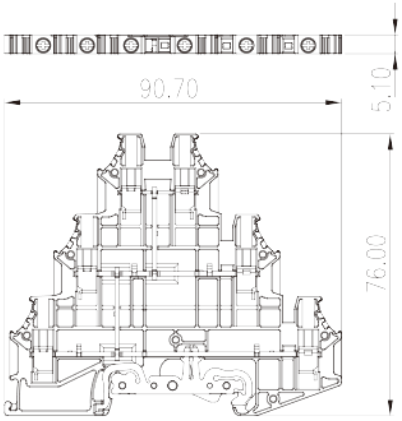

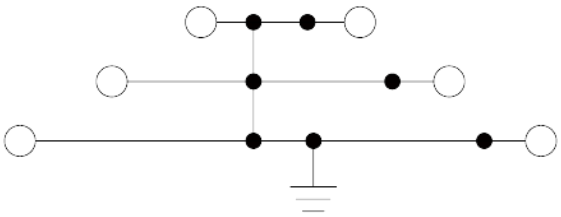

Approvals

Accessories

DKNSPS-001-OR

Partition Plate

For DK2.5N, DK4N, DK2.5N-TN, DK4N-TN, DK2.5N-TR, DK4N-TR, DK2.5N-3L Series, DKK2.5N Series, DKK4N Series, DK2.5L-3L, DK2.5LU-3L. Orange color. Using UL94-V0 class of insulation material.

DSS2.5N-XXP

Plug-in bridge

For DK2.5N, DK2.5N-TN, DK2.5N-TR, DKK2.5N, DKK2.5N-PV, DK2.5L-3L, DKES1.5N2, DKES1.5N3, DKK2.5N-L2PE, DKK2.5N-PE, DKK2.5N-TP, DKK2.5N-TG, DKK2.5N-CP, DK2.5N-3L Series Red color. Using UL94-V0 class of insulation material.

CSC-2.5XXPN

Insertion Bridge

For DK2.5N Series, DKK2.5N Series, DK2.5N-3L Series, DK2.5L-3L. Beige color. Using UL94-V0 class of insulation material.

TM47LW

Marking Label

© DINKLE ENTERPRISE CO ,LTD. ALL RIGHT RESERVED

For BEST APPLICATION： DP2.5N Series, DP2.5N-3L-SPE, DPH2.5 Series, AK2.5 Series, DKES1.5N2, DKES1.5N3, DK2.5N Series, DKK2.5N Series, DK2.5N-3L Series
AVAILABLE APPLICATION： DKES1.5, DK2.5-PE White color. Using UL94-V0 class of insulation material.

DSS2.5N-6688-XXP

Plug-in bridge
For DK2.5N, DK2.5N-TN, DKK2.5N Series, DK2.5N-3L Series, DK2.5L-3L. Red color. Using UL94-V0 class of insulation material.

TS-35

DIN-Rail
For DP / DK..N / DK.. / AK / DKB / DKU.. /DKM.. series. Material is iron. Length of 1000mm / 2000mm.

TS-35/15

DIN-Rail
For DK / DK-PE series. Material is iron. Length of 1000mm / 2000mm.

TS-35C

DIN rail end cap
For TS-35 rail. Black color. Using UL94-V2 class of insulation material.

TM-R200

Continuous Flat Marking Labels

0175L1

Lever
For DK2.5N, DK2.5N-TN, DK2.5N-TR, DKK2.5N, DK2.5N-3L, DKK2.5N-PV, DKK2.5N-L2PE, DK2.5N-3L-L3PE, DK2.5N-3L-PE, DK2.5N-3L-PV, DKK2.5N-D01, DKK2.5N-D02, DKK2.5N-D03, DKK2.5N-D04. Orange color. Using UL94-V0 class of insulation material.

0175-T002

Test plug

© DINKLE ENTERPRISE CO ,LTD. ALL RIGHT RESERVED

For DK2.5N, DK2.5N-TN, DK2.5N-TR, DKK2.5N, DK2.5N-3L, DKK2.5N-PV, DKK2.5N-L2PE, DK2.5N-3L-L3PE, DK2.5N-3L-PE, DK2.5N-3L-PV. Red color. Using UL94-V0 class of insulation material.

© DINKLE ENTERPRISE CO ,LTD. ALL RIGHT RESERVED