DP4N-TP

DIN Rail Terminal Blocks > Push-in Design

Date:2026-06-18

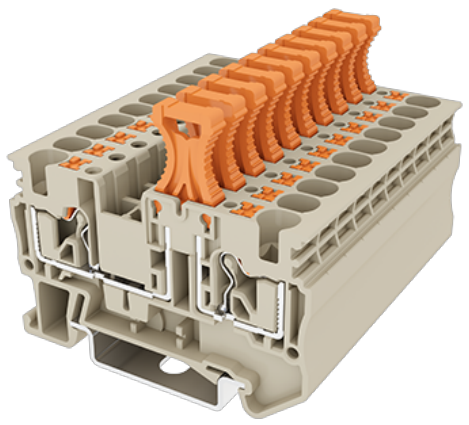

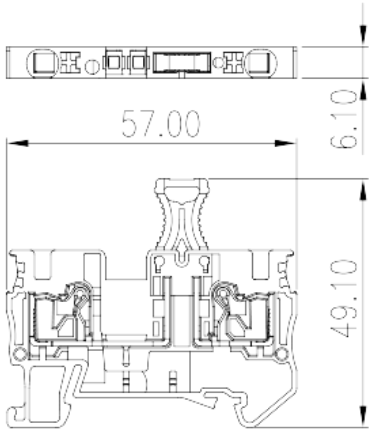

The web catalog is for reference only. Dinkle remains the right of product modification and engineering change of the design.
The final product is made according to engineering drawing.

Product Description

300V, 20A, Beige (default)

General information

Short description	Disconnect Terminal Block, Push-in Design
Category	Disconnect Terminal Block
Color	Beige (default)
Connection method	Push-in Design
Type of locking	Rail Mounting
Length (mm)	57
Width (mm)	6.1
Height (mm)	49.1
Number of positions	≧1P
Level	Single level
Connection points	2

Material information

Insulation material	PA
Insulation material group	I
Flame retardant rating , compliant with UL94	V0

© DINKLE ENTERPRISE CO ,LTD. ALL RIGHT RESERVED

Insulation resistance	≧500MΩ at DC 500V

Connection data-IEC

Rated voltage (V)	500
Rated current (A)	20
Rated voltage (III/3)(V)	500
Rated impulse voltage (III/3)(KV)	6
Conductor cross section solid. min (mm²)	0.2
Conductor cross section solid.max (mm²)	6
Conductor cross section stranded. min (mm²)	0.2
Conductor cross section stranded. max (mm²)	4
Conductor cross section flexible, with min ferrule without plastic sleeve (mm²)	0.25
Conductor cross section flexible, with max ferrule without plastic sleeve (mm²)	4
Conductor cross section flexible, with min ferrule with plastic sleeve (mm²)	0.25
Conductor cross section flexible, with max ferrule with plastic sleeve (mm²)	4
2 conductors with same cross section flexible, min twin ferrules with plastic sleeve (mm²)	0.5
2 conductors with same cross section flexible, max twin ferrules with plastic sleeve (mm²)	1
Slotted screwdriver size (Blade thickness x Width)(mm)	0.8X4
Stripping Length (mm)	12
Mounting rail	TS-35
End cover plate required	YES
Grounding connections	NO

Connection data-UL

Rated voltage (UL/CUL Group B)(V)	300
Rated current (UL/CUL Group B)(A)	20
Rated voltage (UL/CUL Group C)(V)	300
Rated current (UL/CUL Group C)(A)	20
Min. solid wire connection (AWG) acc. to UL/CUL	24
Max. solid wire connection AWG acc. to UL/CUL	10
Min. stranded wire connection AWG acc. to UL/CUL	24
Max. stranded wire connection AWG acc. to UL/CUL	10

© DINKLE ENTERPRISE CO ,LTD. ALL RIGHT RESERVED

Environment & Safety

Back of the hand protection (YES or NO)	YES
Finger protection (YES or NO)	YES
Operating temperature. max (°C)	120
Operating temperature. min (°C)	-40

UL Recognized

Wire Range (Group B)(AWG)	24~10
Rated voltage (Group B)(V)	300
Rated current (Group B)(A)	20
Wire Range (Group C)(AWG)	24~10
Rated voltage (Group C)(V)	300
Rated current (Group C)(A)	20

CUL Recognized

Wire Range (Group B)(AWG)	24~10
Rated voltage (Group B)(V)	300
Rated current (Group B)(A)	20
Wire Range (Group C)(AWG)	24~10
Rated voltage (Group C)(V)	300
Rated current (Group C)(A)	20

Drawings

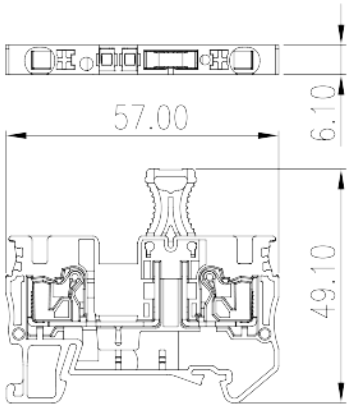

Approvals

© DINKLE ENTERPRISE CO ,LTD. ALL RIGHT RESERVED

Accessories

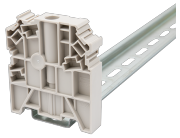

SS6N
End Bracket
For TS-35, TS-35/15 rails. Beige color. Using UL94-V0 class of insulation material.

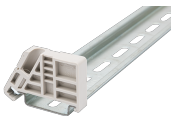

SS11
End Bracket
For TS-35, TS-35/15 rails. Beige color. Using UL94-V0 class of insulation material.

DSD01-4XXN
Plug-in bridge
For DP4N, DP4N-TN, DP4N-TR, DP4N-PE, DP4N-TN-PE, DP4N-TR-PE, DPP4N Series, DP4N-TP, DP4N-TG, DP4N-CP, DP4N-TF, DP4N-TFLXX, DP4N-TFU, DP4N-TFULXX, DP4N-T, DP4N-M, DP4N-MLXX, AK4, AK4-TN, AK4-TR, AKK4, AK4-TG, AK4-TF, AK4-TFLXX, AK4-T, AK4-M, AK4-MLXX, DP2.5NU Series, DPP2.5NU Series. Red color. Using UL94-V0 class of insulation material.

TM43LW
Marking Label
For BEST APPLICATION： DP4N, DP4N-PE, DP4N-TN, DP4N-TN-PE, DP4N-TR, DP4N-TR-PE, DP4N-3L-SPE, AK4, AK4-PE, AK4-TN, AK4-TN-PE, AK4-TR, AK4-TR-PE, DPP4N Series, DP4N-T Series, DP4N-TF Series, DP2.5NU Series, DPP2.5NU Series, DK2.5LU-3L, DK4P, AKK4, AK4-TF, AK4-T Series, DK4S, PM4N-XXP, SS2N White color. Using UL94-V0 class of insulation material.

TS-35
DIN-Rail
For DP / DK..N / DK.. / AK / DKB / DKU.. /DKM.. series. Material is iron. Length of 1000mm / 2000mm.

0208-E002
Spacer

© DINKLE ENTERPRISE CO ,LTD. ALL RIGHT RESERVED

For DP4N Series, DPP4N Series Red color. Using UL94-V0 class of insulation material.

TS-35/15

DIN-Rail

For DK / DK-PE series. Material is iron. Length of 1000mm / 2000mm.

TS-35C

DIN rail end cap

For TS-35 rail. Black color. Using UL94-V2 class of insulation material.

0208-T002

Test Plug

For DP4N Series, DPP4N Series Red color. Using UL94-V0 class of insulation material.

TM-R100

Continuous Flat Marking Labels

DP4C-TFU

End Cover

For DP4-TFU / DP4-TFU(5x20) Beige color. Using UL94-V0 class of insulation material.

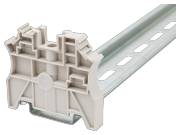

SS7N

End Bracket

For TS-35, TS-35/15 rails. Beige color. Using UL94-V0 class of insulation material.

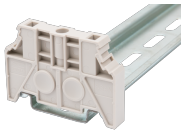

SS4N

End Bracket

For TS-35, TS-35/15 rails. Beige color. Using UL94-V0 class of insulation material.

© DINKLE ENTERPRISE CO ,LTD. ALL RIGHT RESERVED

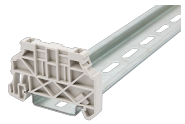

SS13
End Bracket
For TS-35, TS-35/15 rails. Beige color. Using UL94-V0 class of insulation material.

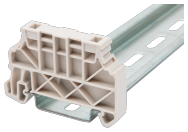

SS5N
End Bracket
For TS-35, TS-35/15 rails. Beige color. Using UL94-V0 class of insulation material.

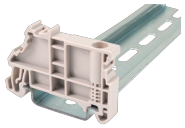

SS2N
End Bracket
For TS-35, TS-35/15 rails. Beige color. Using UL94-V0 class of insulation material.

© DINKLE ENTERPRISE CO ,LTD. ALL RIGHT RESERVED