GFNC-2A4A

iO-GRID NEMO Integrated Remote I/O Module

Integrated Remote I/O module with EtherCAT communication, featuring 16 digital inputs and 16 digital outputs.
SOURCE(PNP) I/O design for flexible machine control applications.
Pluggable terminal block and push-in wiring enable faster installation and easier maintenance.
Integrated point indicators and independent LED status display make I/O status easy to identify.
Dual RJ45 ports support distributed station architecture and flexible machine expansion.

Product Certification

Technical Specifications

System Voltage Supply	24 VDC (-15%~+20%)
Current Draw	Max. 180mA@24VDC
Input / Output Signal Type	Source
Input Voltage Range for Signal (0)	0 VDC...10 VDC
Input Voltage Range for Signal (1)	15VDC...30 VDC
Load Specification	Ohmic load/ inductive load / lamp load
Protective Circuit	Overvoltage Protection / Undervoltage Protection / Overcurrent Protection
Max. Output Current In Single Channel	0.5 A
Connection Method	Push-in connection
Isolation Method	Digital Isolator
Indicators	16 Green / Input Status / Output Status; Power Status : Green; System Status : Green; Alarm Status : Green/Red; Communication Status : Green/Red
Number Port	2

Communication Specifications

Protocol	EtherCAT

General Specifications

Dimensions (W*D*H)	25 x 116 x 85 mm
Weight	150 g
Operating Temperature	-10 ... 60 °C
Storage Temperature	-25...+85˚C

Daudin Co., LTD. ALL RIGHT RESERVED

TEL:+886-02-8069-9000 E-mail:service@daudin.co

Permissible Humidity(Non-condensing)	RH 95%
Altitude Limit	< 2000 m
Ingress Protection (IP)	IP 20
Pollution Severity	II
Safety Approval	UL / CE
Wire Range (IEC / UL)	0.2 mm^2 ~ 1.5 mm^2 / AWG 24~16

Daudin Co., LTD. ALL RIGHT RESERVED

TEL:+886-02-8069-9000 E-mail:service@daudin.co

Product Drawing

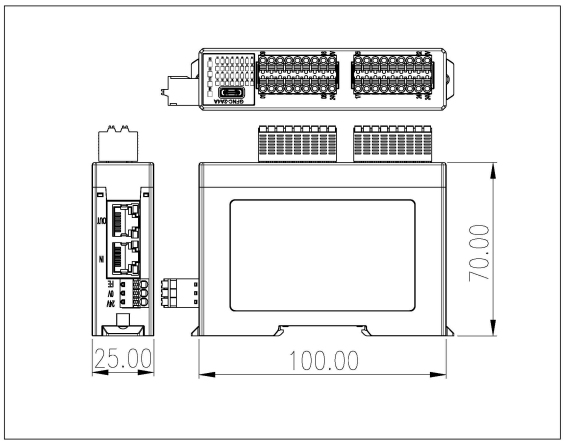

The company reserves the right to modify and change the design of products.

Daudin Co., LTD. ALL RIGHT RESERVED

TEL:+886-02-8069-9000 E-mail:service@daudin.co