GFNC-3A3A

iO-GRID NEMO Integrated Remote I/O Module

Integrated Remote I/O module with EtherCAT communication and 32 digital output points.
SINK(NPN) output design for a wide range of machine control applications.
Pluggable terminal block and push-in wiring help improve installation and maintenance efficiency.
Integrated point indicators and independent LED status display make output status easy to identify.
Dual RJ45 ports support distributed control architecture and flexible field expansion.

Product Certification

Technical Specifications

System Voltage Supply	24 VDC (-15%~+20%)
Current Draw	Max. 230mA@24VDC
Input / Output Signal Type	Sink
Number of Output	32
Load Specification	Ohmic load/ inductive load / lamp load
Protective Circuit	Overvoltage Protection / Undervoltage Protection / Overcurrent Protection
Max. Output Current In Single Channel	0.5 A
Connection Method	Push-in connection
Isolation Method	Digital Isolator
Indicators	32 Green / Output Status; Power Status : Green; System Status : Green; Alarm Status : Green/Red; Communication Status : Green/Red
Number Port	2

Communication Specifications

Protocol	EtherCAT

General Specifications

Dimensions (W*D*H)	25 x 116 x 85 mm
Weight	150 g
Operating Temperature	-10 ... 60 °C
Storage Temperature	-25...+85˚C
Permissible Humidity(Non-condensing)	RH 95%

Daudin Co., LTD. ALL RIGHT RESERVED

TEL:+886-02-8069-9000 E-mail:service@daudin.co

Altitude Limit	< 2000 m
Ingress Protection (IP)	IP 20
Pollution Severity	II
Safety Approval	UL / CE
Wire Range (IEC / UL)	0.2 mm^2 ~ 1.5 mm^2 / AWG 24~16

Daudin Co., LTD. ALL RIGHT RESERVED

TEL:+886-02-8069-9000 E-mail:service@daudin.co

Product Drawing

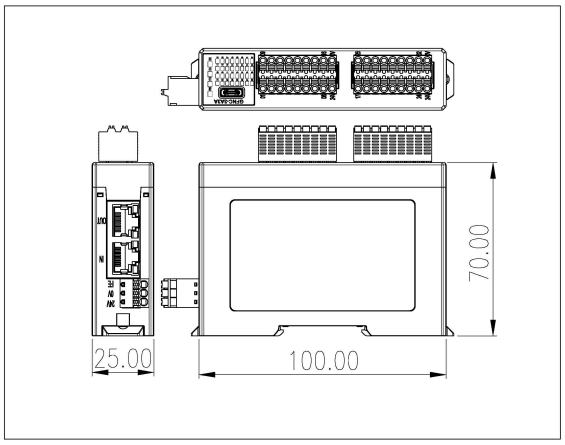

The company reserves the right to modify and change the design of products.